THE UNIVERSITY OF MELBOURNE

COMP30023 – Computer Systems

Introduction to Networks & OSI Layers

Dr Lachlan Andrew

©2025 University of Melbourne

How to be successful

- **Understand** the material, don't just memorize it.
- If you fall behind, try to catch up as fast as possible.
- Attempt the workshop tasks every week. You should attempt the theory/tutorial questions *before* you attend your workshop.
- Check the LMS for announcements and discussion board posts.

© 2025 University of Melbourne

Outline of this half

- Wk 6: Intro to the Internet; layered protocol stacks
- Wk 7: Socket programming
- Wk 8: Applications: Email, looking up hostnames (DNS)
- Wk 9: The web (HTTP). Transport layer: services, UDP
- Wk 10: Streams of bytes (TCP)
- Wk 11: IP Addressing, Routing and subnets
- Wk 12: Control protocols, Network address translation. Review

© 2025 University of Melbourne

Academic Integrity

- Unless otherwise specified, all work is to be done on an individual basis or in the pairs you have registered with us

- Academic Integrity is of utmost importance, and we will all follow the policies of the University and of the School of Engineering
- Please refer here for further information http://academicintegrity.unimelb.edu.au/.
- For the purpose of ensuring academic integrity, all submission attempts by a student may be inspected, regardless of the number of attempts made

This lecture

- Structure of the Internet
- Layered network protocol models / services
- Other network models: OSI
- Protocol stack

© 2025 University of Melbourne

The Internet

- The Internet is composed of the aggregation of many smaller networks – not a single network or under a single point of control.
- Historically, the Internet developed in 3 distinct phases
  - ARPANET (1960's - early 1970's)
  - NSFNET (1970's - early 1980's)
  - Internet (1980's - present)
- . . . the rise and rise of social media, Web 2.0+ (present)

© 2025 University of Melbourne

The Internet – High Level Overview

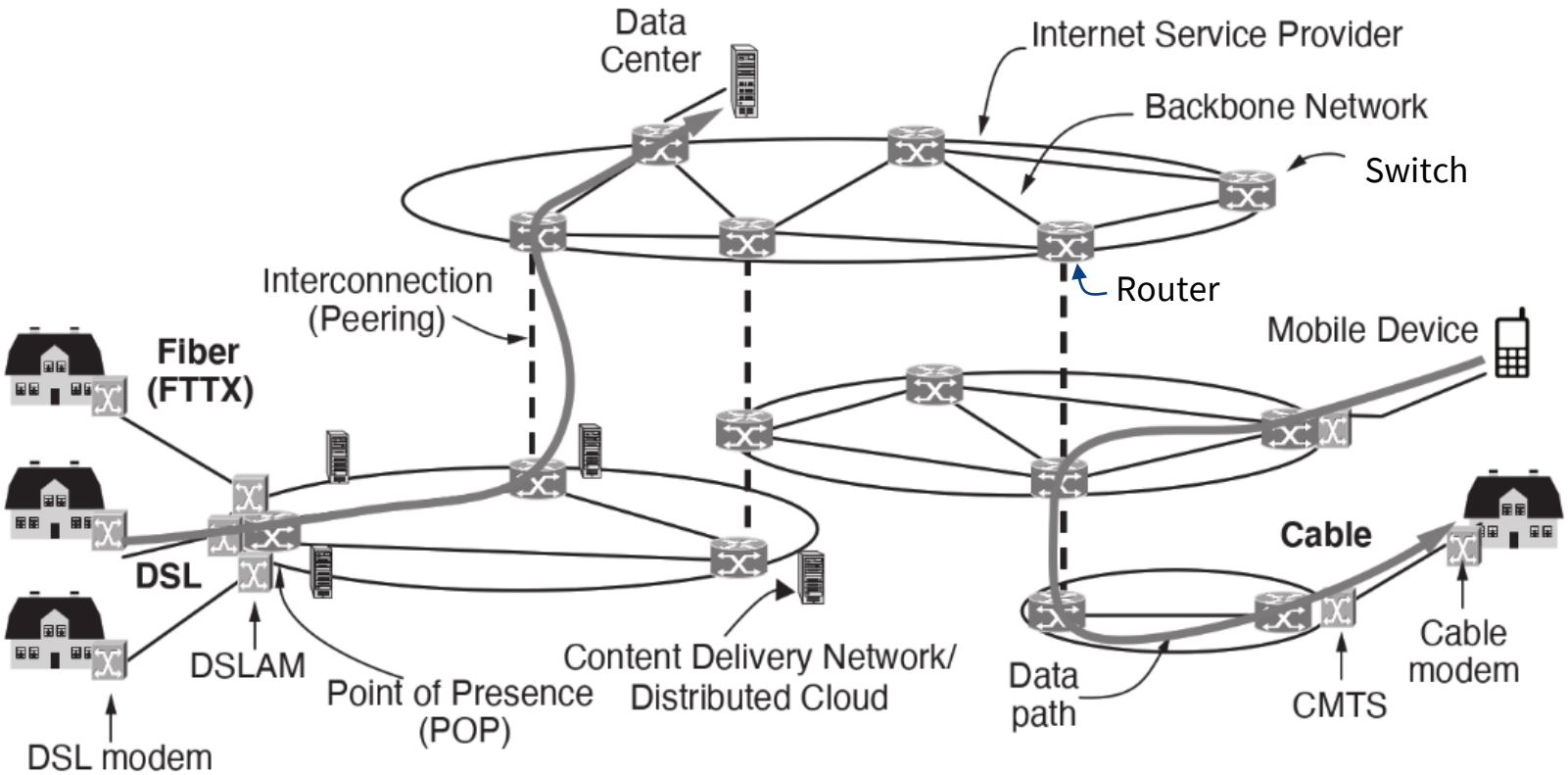

TN 6th 1-16

Complexity of the Internet

- The internet connects millions of nodes
- There are no direct physical connections between most pairs
- We need to tell data where to go
- We need to specify the actual physical signals to be sent
- We need to share physical links between different pairs

- We need a modular way to handle these tasks separately

© 2025 University of Melbourne

Protocol stacks

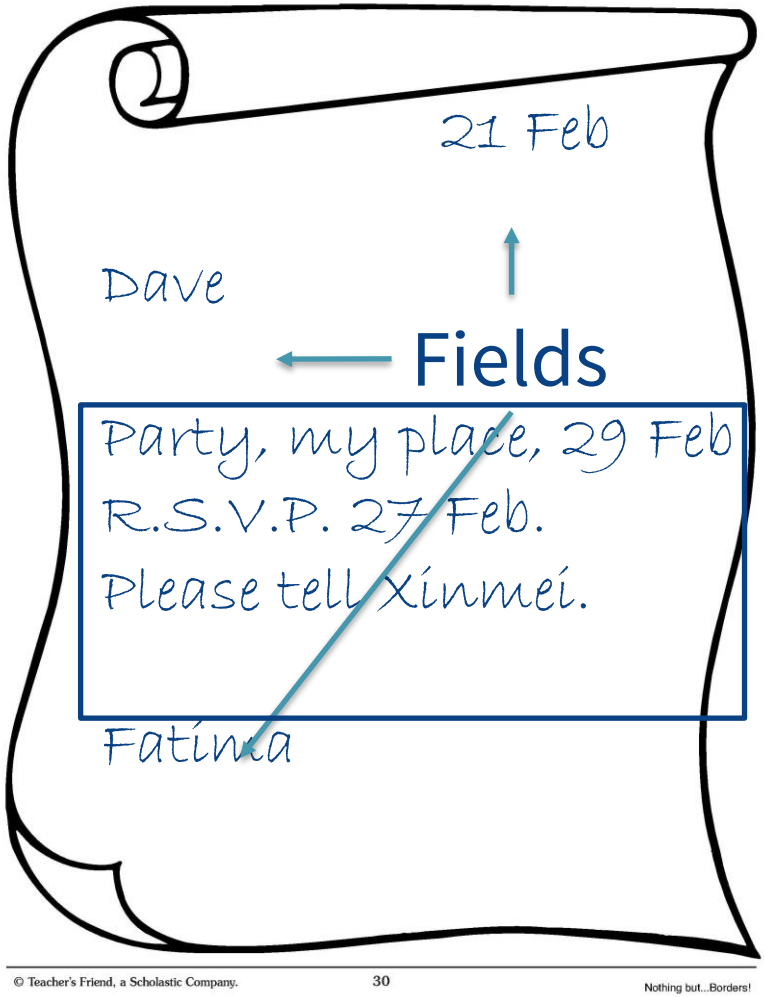

Dave
Dave's house
Parkville

AUSTRALIA
POST

Protocol stacks

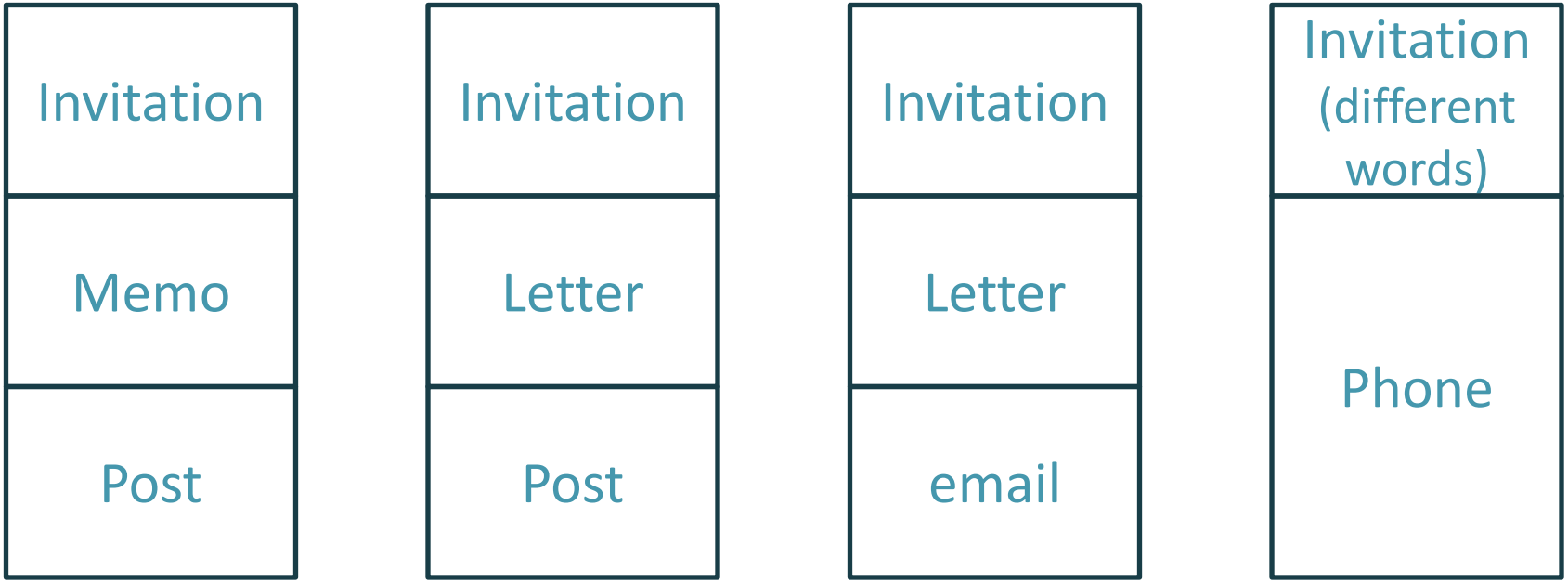

Network Models

- Model the network as a stack of layers. **Just a model**
- Each layer offers services to layers above it.
- Inter-layer exchanges are conducted according to a protocol.

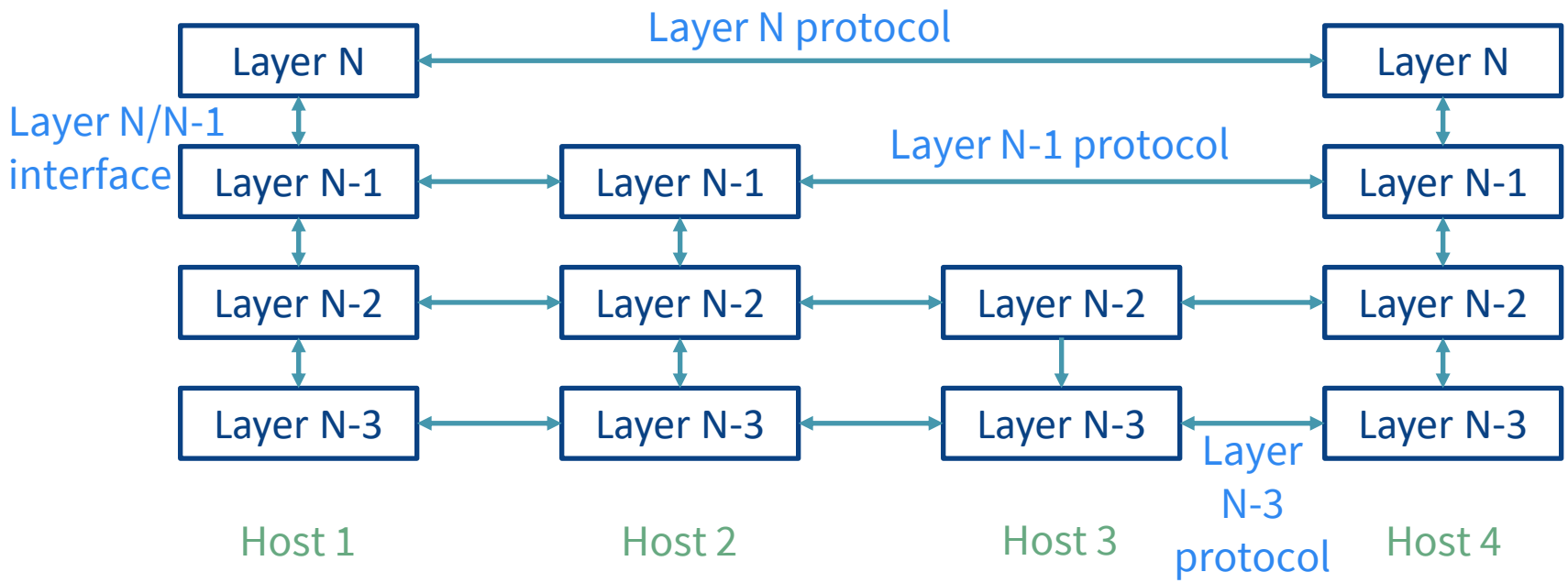

Services to protocols relationship

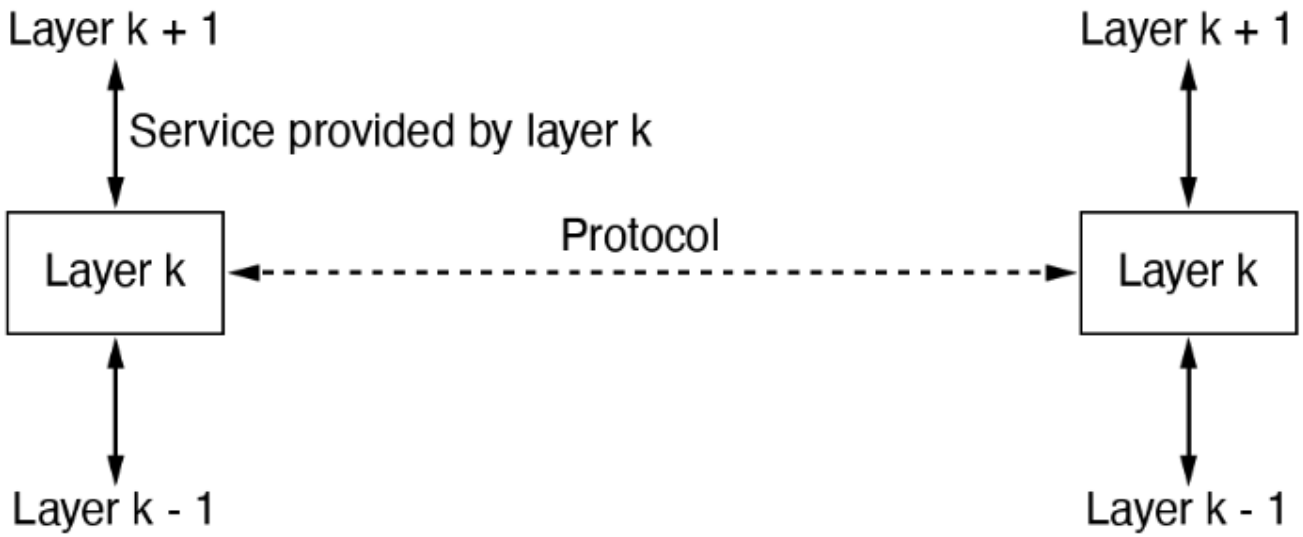

TN 6th 1-31

- Service = set of primitives that a layer provides to a layer above it
  - interfaces between layers
- Protocol = rules which govern the format and meaning of packets that are exchanged by peers within a layer
  - packets sent between peer entities

Connection-oriented and Connectionless services

- Connection Oriented (e.g., TCP, MPLS):
  - connect, use, disconnect
  - negotiation inherent in connection setup
  - similar to telephone service
- Connectionless (e.g., UDP, HTTP):
  - Each message is self-contained
  - similar to postal service or text message
- The choice of service type affects the reliability, quality and cost of the service itself.

© 2025 University of Melbourne

TCP/IP vs OSI

- Two standard sets of layers: TCP/IP and OSI
- The TCP/IP model reflects what happens on the internet
- The OSI model helps reflect the thought process that should be followed when designing a network or diagnosing a fault
  - It remains at the core of a number accreditation schemes
- View the OSI model as idealised, but with a degree of flexibility
  - When we map protocols surrounding TCP/IP to the OSI model, don't be surprised to see protocols straddle layers or for there to be ambiguity as to which layer a protocol belongs to

© 2025 University of Melbourne

Open Systems Interconnection (OSI) reference model

- A layer should be created where a different abstraction is needed.
- Each layer should perform a well defined function.
- The function of each layer should be chosen with a view toward defining internationally standardised protocols.
- The layer boundaries should be chosen to minimise the information flow across the interfaces.
- The number of layers should be large enough that distinct functions need not to be thrown together in the same layer out of necessity, and small enough that the architecture does not become unwieldy.

© 2025 University of Melbourne

OSI Model

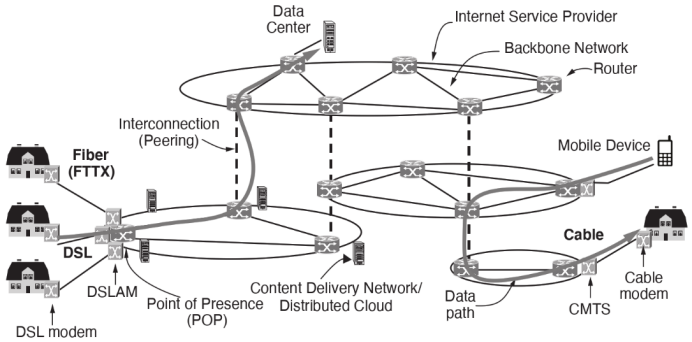

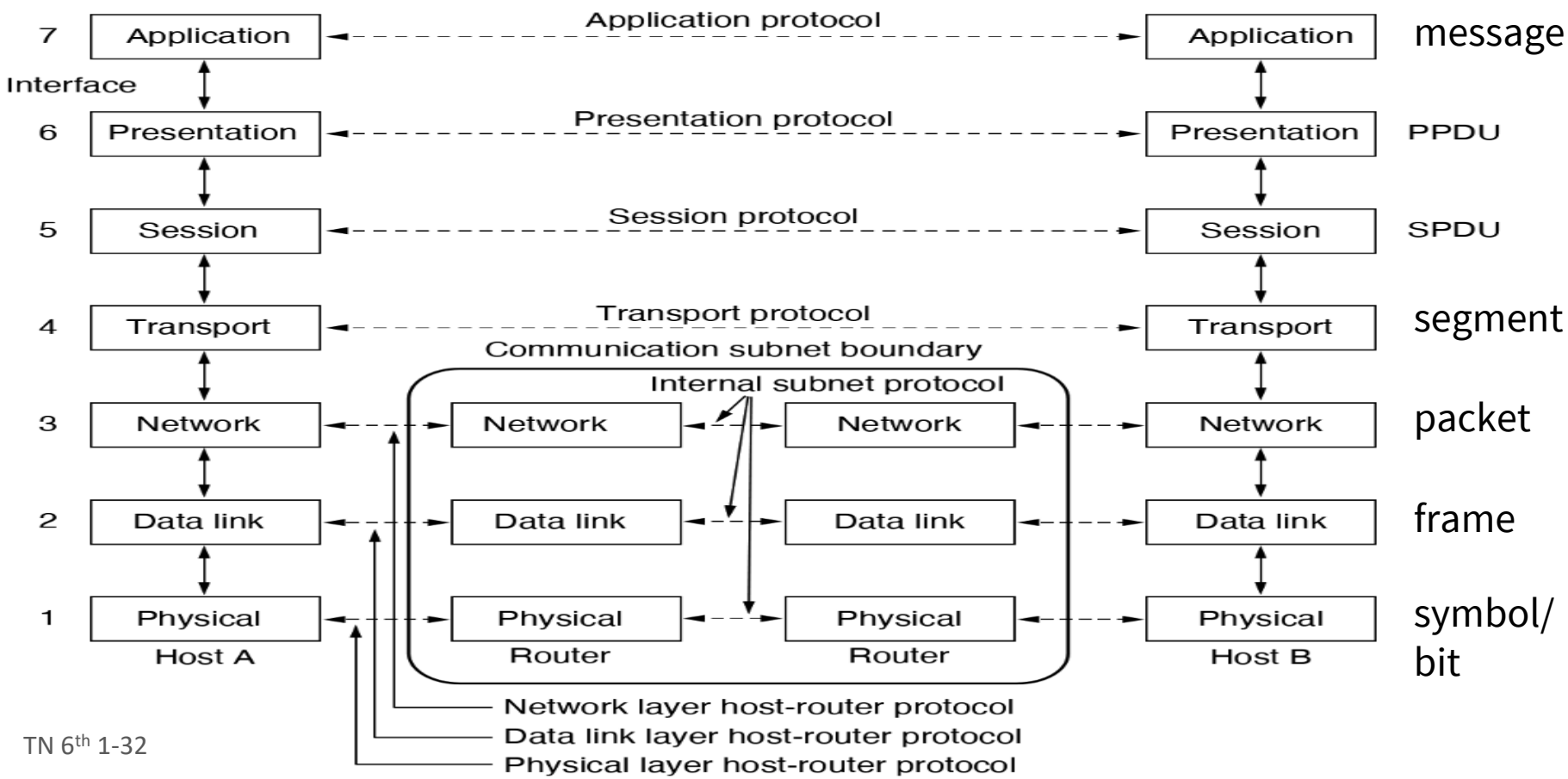

TN 6th 1-32

Point-to-point, end-to-end

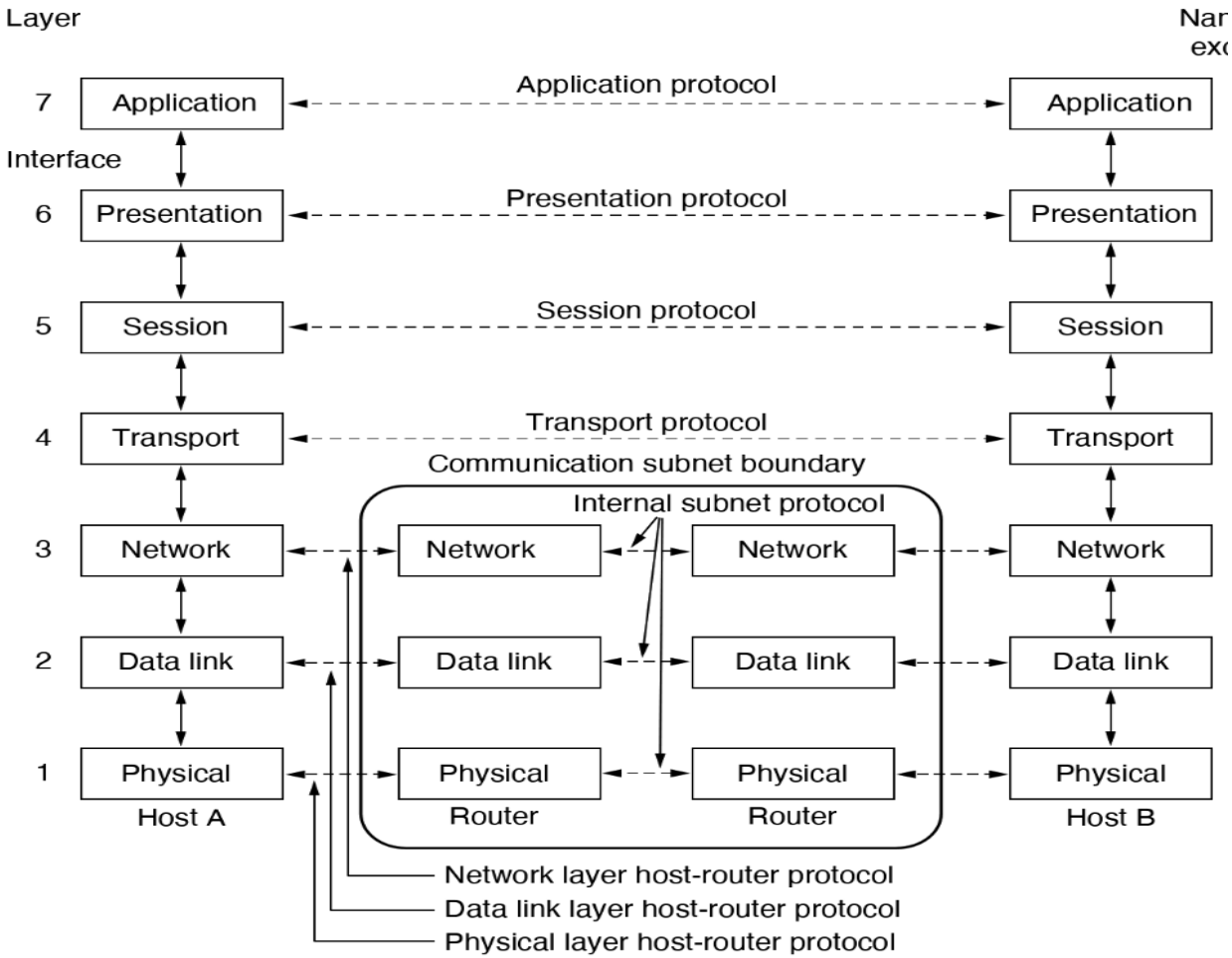

- Use data
- Tidy up e2e
- Get data e2e
- Tidy up p2p
- Get data p2p

TCP/IP model

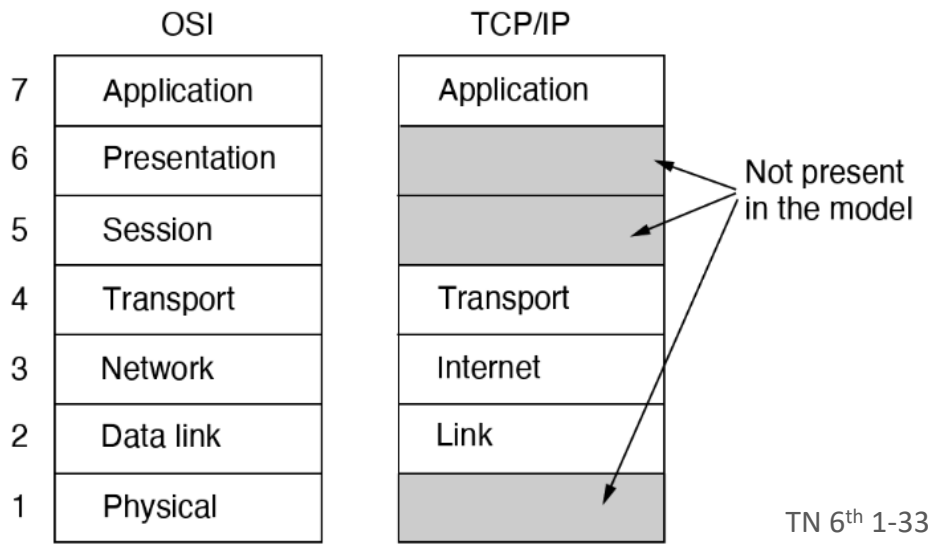

TN 6th 1-33

- TCP/IP – Transmission Control Protocol/Internet Protocol – was designed to be independent of data link and physical layers (Cerf & Kahn, 1974)

Using protocols

encapsulation

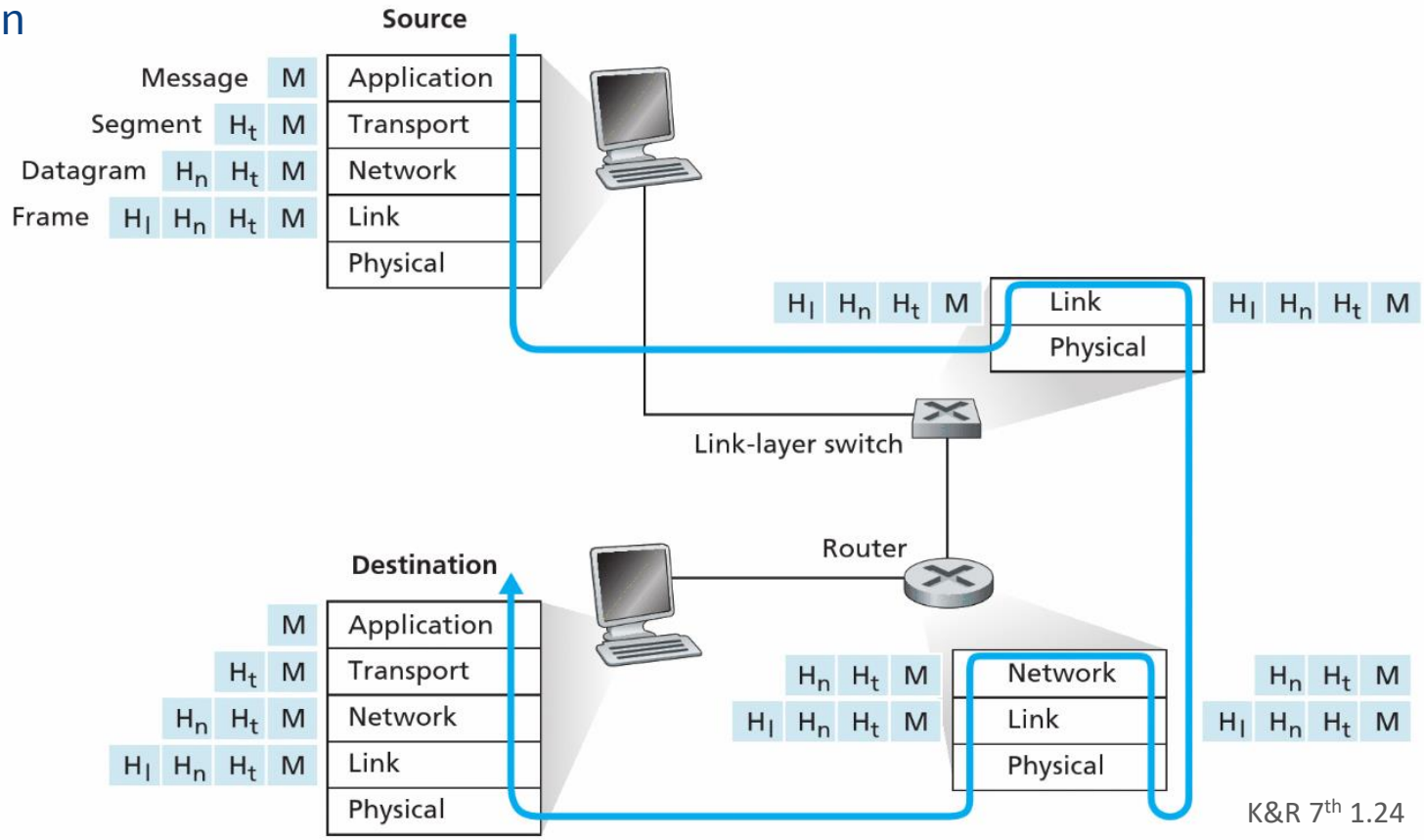

K&R 7th 1.24

The protocol stack

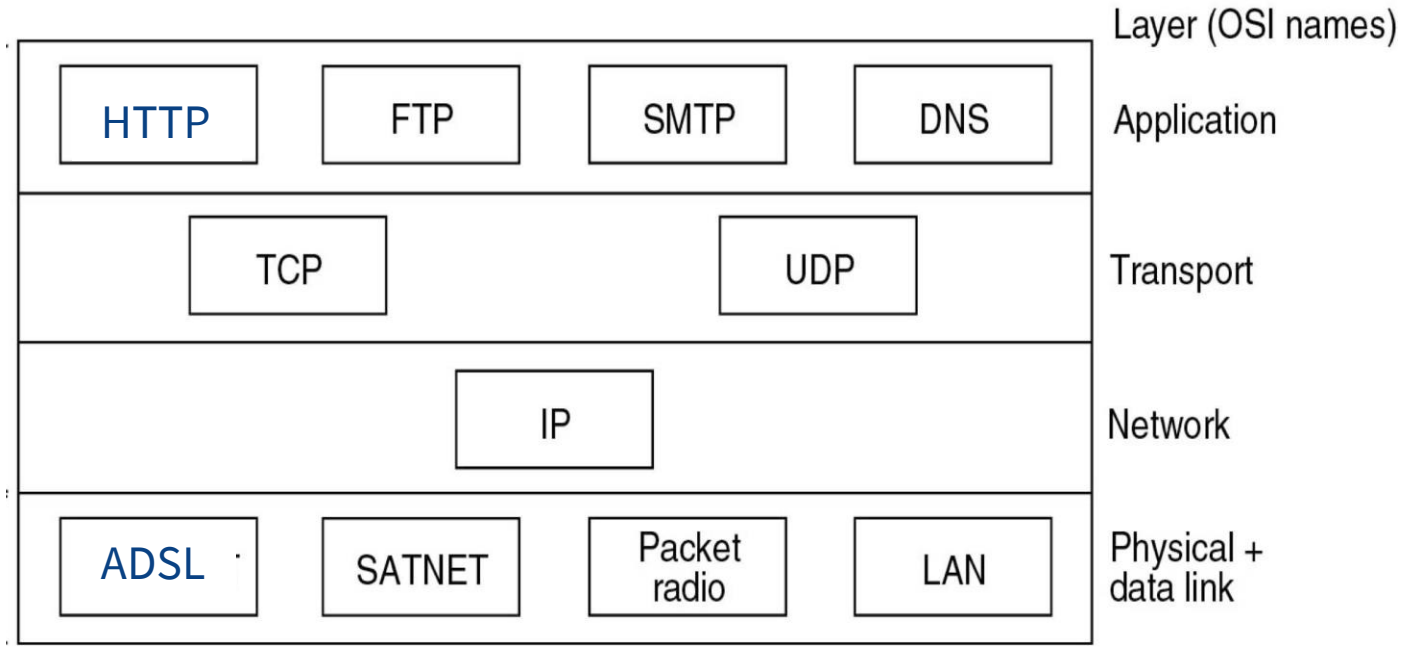

We will be concentrating on the top three layers – the application level and a high-level overview of TCP, UDP and IP.

IP: the “narrow waist”

- Some people say the internet protocols are like an hourglass
  - Many application protocols
  - One network protocol (IP)
  - Many link layer protocols

- “IP over everything, and everything over IP”
  - If your new physical network supports IP, it supports everything
  - If your application runs on IP, it runs over everything
- It didn’t have to be this way
  - SMS (text messages) first ran on a non-IP network, as did voice calls
  - One network can support multiple network layer protocols

© 2025 University of Melbourne

Network architecture

- The “narrow waist” is part of the “architecture” of the network
  - Design decisions that go beyond individual layers
  - Hard to change – good to get them right at the start
  - But trying too hard leads to stagnation, like OSI suffered
- TCP/IP got it right by experimenting when the internet was small and still flexible
  - TCP+IP used to be a single layer, and many apps would not have run well over it.

© 2025 University of Melbourne

And finally…

- Will IP always be the “narrow waist”?
- Many networks (like in hotels and airports) want people to be able to surf the web, but not use other protocols.
- They have firewalls that block everything except the web protocol, HTTP
- To get around this, new application protocols send data as HTTP requests/responses

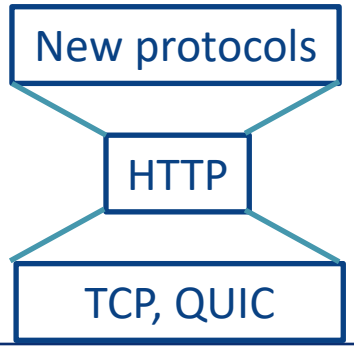

- HTTP is becoming a new “narrow waist”

Acknowledgement

- The slides were based on slides prepared by Chris Culnane, based on material developed previously by: Michael Kirley, Zoltan Somogyi, Rao Kotagiri, James Bailey and Chris Leckie.
- Some of the images included in the notes were supplied as part of the teaching resources accompanying the text books listed on the previous slides.
  - (And also) Computer Networks, 6th Edition, Tanenbaum A., Wetherall. D. https://ebookcentral.proquest.com/lib/unimelb/detail.action?docID=6481879
- Textbook Reference: Chapter 1, especially section 1.5, 1.7 and 1.1

Background

The remainder of these slides are not assessable

They are just for the curious

© 2025 University of Melbourne

The Internet – a brief history

- It is necessary to understand at least some of the history of the internet in order to understand how the current set of standards came to be
- As with most IT projects there were opposing views, designs, and teams. Ultimately, the group that focussed on implementation over standardisation won out
- As we shall discuss throughout the lectures, the design decisions taken 40+ years ago have left us with a number of security issues today

© 2025 University of Melbourne

The Internet – a brief history

- ARPANET (1969-1990)
  - Advanced Research Projects Agency Network funded by the Department of Defence (ARPA was part of DoD)
  - Initially started with just 4 sites: UCLA, SRI International, University of California Santa Barbara, University of Utah
  - TCP/IP was developed at ARPANET
  - Misconception that it was designed to survive a nuclear attack – robustness was a necessity in a world of unreliable communication links (https://www.internetsociety.org/internet/history-internet/brief-history-internet/)
    - Paul Baran, co-inventor of packet switching, did have that goal

© 2025 University of Melbourne

The Internet – a brief history

- International Network Working Group (1972)
  - Chaired by Vint Cerf (one of the father's of the internet)
  - Proposed a packed switched datagram based network standard
  - Submitted to International Telegraph and Telephone Consultative Committee (CCITT, now ITU-T) for standardisation, but rejected
  - Cerf resigned as chairman in 1975; went to work with Bob Kahn at ARPA
  - Cerf & Kahn had already published the foundations of TCP/IP in 1974 in their paper "A Protocol for Packet Network Intercommunication"
  - Cerf & Kahn developed internet protocols in a restricted environment (ARPANET) that they could control

© 2025 University of Melbourne

The Internet – a brief history

- OSI Model
  - Remaining members of INWG regrouped under the International Standards Organisation (ISO) working group to design the OSI
  - This left a bitter rivalry between those at ARPANET and the OSI working group
  - First plenary meeting in 1978, published as an international standard in 1984
  - OSI looked liked the dominant player – even the US Department of Defence recommended moving away from TCP/IP to OSI
  - By the late 80's the slow development of the OSI model was leading to increased frustration

© 2025 University of Melbourne

The Internet – a brief history

- NSFNet (National Science Foundation) created in 1986, again to provide researchers access to supercomputer sites in the USA
- By the late 80's commercial internet service providers started to appear
- Also in the 80's CERN developed their TCP/IP based network, which would ultimately lead to the creation of the World Wide Web
- TCP/IP became the protocol stack of choice and eventually the OSI became little more than theoretical abstraction

© 2025 University of Melbourne

The internet – a brief history

- It is useful to understand some history of the internet in order to understand how the current set of standards came to be
- As always, there were opposing views, designs, and teams. Ultimately, the group that focussed on implementation over standardisation won out
- Based on ARPANet (1969-1990), designed so that universities could share expensive supercomputers
  - Initially just 4 sites: UCLA, SRI International, University of California Santa Barbara, University of Utah

© 2025 University of Melbourne

The two contenders

- ARPANet (1969-1990)
- designed so that universities could share expensive supercomputers
  - Initially just 4 sites: UCLA, SRI International, University of California Santa Barbara, University of Utah
- No thought to scaling to massive sizes

- OSI
- Telephone standards bodies wanted a global standard for data networks
- Wanted interoperability between equipment vendors
  - Rigid, well tested standards
- Concerned with scale

➢ Slow progress

The Internet

- Many of the underlying protocols were designed without consideration for an adversary on the network
  - Security has been retrofitted, with many insecure protocols still widely used (DNS)
- The rivalry between the two groups led to TCP/IP working groups rejecting OSI concepts out of principle
  - The so called “palace revolt” of 1992 in which the limitations of IPv4 were raised, but the proposed OSI solution was rejected and the leaders of the working group voted out for having suggested it. It wasn’t until 1996 that IPv6 was proposed and is still not in widespread use
  - However, one of the important TCP/IP protocols (IS-IS routing) was developed by the OSI and adopted by the TCP/IP community

© 2025 University of Melbourne

Model as a stack of protocols

- Why do we need a model?
  - Interoperability – Open, ideally not proprietary
  - A reference model to develop and validate against independently
  - Since networks are multi-dimensional, a reference model can serve to simplify the design process.
  - It's engineering best practice to have an abstract reference model, and a reference model and corresponding implementations are always required for validation purposes

© 2025 University of Melbourne